Wyckomar

UV Purification Systems

Technical Info

UV-250

Exploded Diagram & Parts List

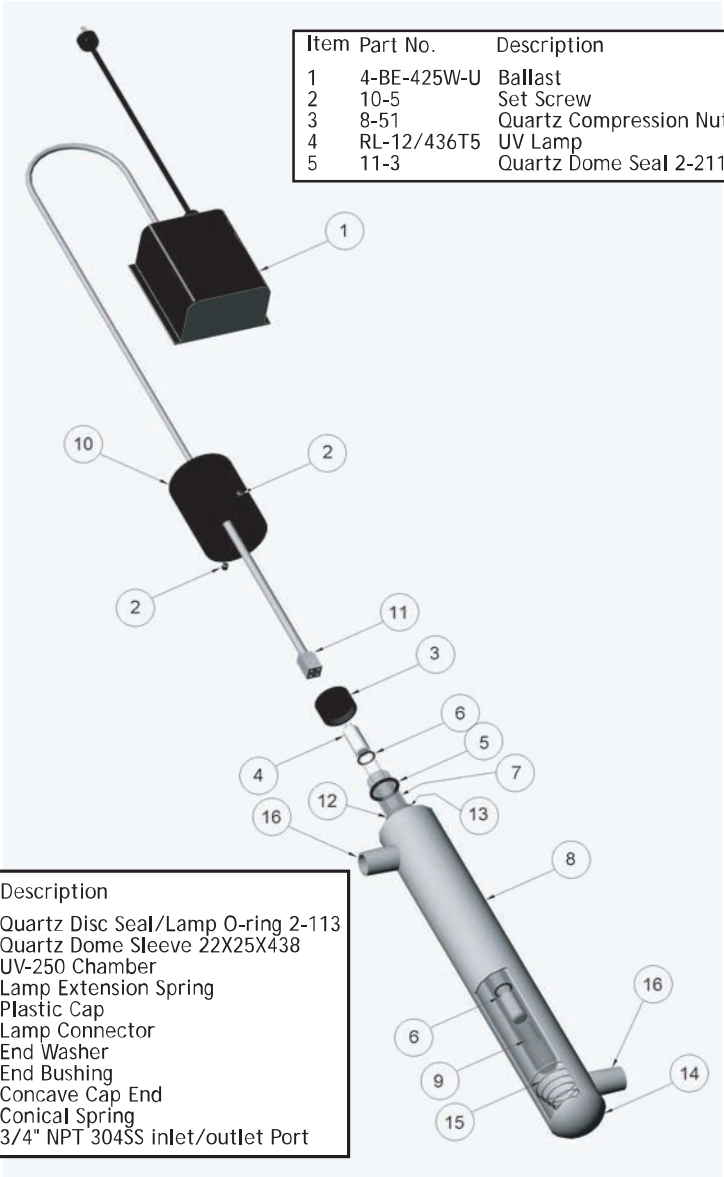

Item	Part No.	Description
1	4-BE-425W-U	Ballast
2	10-5	Set Screw
3	8-51	Quartz Compression Nut
4	RL-12/436T5	UV Lamp
5	11-3	Quartz Dome Seal 2-211

Item	Part No.	Description
6	11-6	Quartz Disc Seal/Lamp O-ring 2-113
7	RQD-438	Quartz Dome Sleeve 22X25X438
8	2-2	UV-250 Chamber
9	8-29-1	Lamp Extension Spring
10	8-4-1	Plastic Cap
11	4-2	Lamp Connector
12	8-50	End Washer
13	8-52	End Bushing
14	8-49-1	Concave Cap End
15	8-25	Conical Spring
16	8-11	3/4" NPT 304SS inlet/outlet Port